Data Sheet | Item Number: 879-3020

Energy meter (MID); for direct connection; 65A; 3x230/400V; 50Hz; Modbus® and M-Bus; 2 x S0 interface; 4PS

https://www.wago.com/879-3020

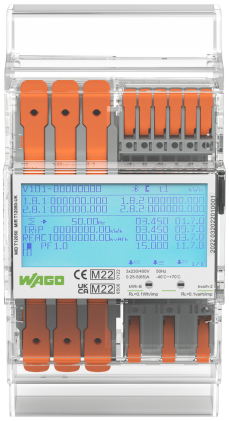

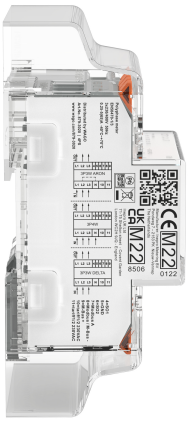

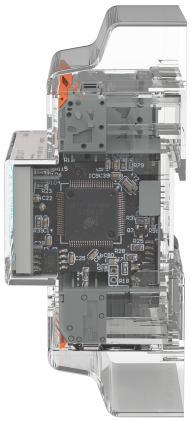

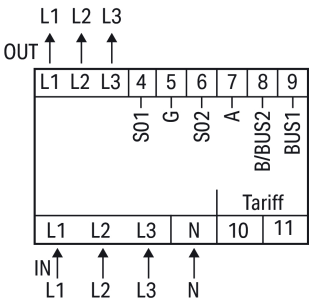

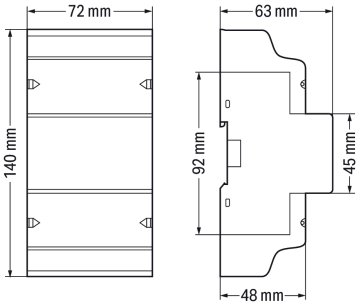

Conductor cross-section	Primary rated current	Ambient operating temperature 40 °C	55 °C	70 °C
4 mm² (Fine-stranded conductor)	15 A			X
	25 A		X	
	30 A	X		
4 mm² (Fine-stranded conductor; with insulated ferrule)	17 A			X
	27 A		X	
	32 A	X		
6 mm² (Fine-stranded conductor)	25 A			X
	37 A		X	
	41 A	X		
6 mm² (Fine-stranded conductor; with insulated ferrule)	27 A			X
	39 A		X	
	41 A	X		
10 mm² (Fine-stranded conductor)	30 A			X
	40 A		X	
	55 A	X		
10 mm² (Fine-stranded conductor; with insulated ferrule)	30 A			X
	45 A		X	
	55 A	X		
16 mm² (Fine-stranded conductor)	35 A			X
	50 A		X	
	65 A	X		
16 mm² (Fine-stranded conductor; with insulated ferrule)	35 A			X
	55 A		X	
	65 A	X		
25 mm² (Fine-stranded conductor)	65 A			X
	45 A		X	

Continued on next page

Short description:
Crucial for trimming costs, comprehensive energy measurement is necessary to optimize energy consumption. WAGO's portfolio has energy meters that simplify this task while offering several key advantages. They use push-in connection technology with a lever, making them connect quickly and easily. The devices have a width of just 72 mm for direct measurement. These slim profiles save a tremendous amount of control cabinet space. In addition to the values for active and reactive energy, the energy meters also record the mains frequency, as well as current, voltage and power for all phases. And the user can conveniently scan all of these energy characteristics at a glance on a large, illuminated display.

Features:
- Push-in CAGE CLAMP® and lever save time at every stage
- Real space savings: 72 mm wide (4PS)
- Measurement of supply and purchase
- Energy measurement in four tariffs
- The communications pro: M-Bus/Modbus® interface and two S0 pulse outputs
- Full transparency at a glance: display energy quality characteristics on an illuminated full-format display
- Intuitive configuration: touch-sensitive controls and configuration app via *Bluetooth®*

Technical data

Configuration

Configuration options	Touch-sensitive controls Configuration app via *Bluetooth®*

Input

Input signal type	Voltage Current
Network configuration	Two-wire, three-wire and four-wire networks
Reference current I_{ref}	5 A
Measured variable	Voltage Current Electrical output Mains frequency
Nominal input voltage $U_{i\,nom}$	3 x 230 … 400 VAC
Input voltage range	±20 %
Input current I_i	≤ 65 A
Frequency range	45 … 60 Hz

Communication

Communications	Modbus® M-Bus *Bluetooth®*
Interface	RS-485 (2-wire); 2 x S0 interfaces (configurable)
Indicators	LCD with backlight
Rate control input	230 VAC

Signal Processing

Measured variables (calculated)	Active and reactive energy in supply and reference direction
Measurement type (load profile)	No
Measured value acquisition	for direct connection

Measurement Error

Accuracy class	Class B (= 1 % error); Active energy per EN 50470-3
Calibration validity period	8 years

Power Supply

Power supply type	Via measurement circuit
Power consumption $P_{max.}$ (phase; active power)	2 W
Power consumption $P_{max.}$ (phase; apparent power)	10 VA

Safety and protection

Dielectric strength	4 kV; 1 min
Impulse withstand voltage (1.2/50 µs)	6 kV
Pollution degree	2
Protection class	II
Protection type	IP51 / IP20; IP51 (front side); IP20 (connection)

 Continued on next page

Connection Data

Connection position	Output top (PS)
Design	4PS

Connection 1

Connection type	Voltage/current
Connection technology	Push-in CAGE CLAMP®
WAGO connector	WAGO 2616 Series
Actuation type	Lever
Strip length	18 … 20 mm / 0.71 … 0.79 inches
Solid conductor	0.75 … 16 mm² / 18 … 4 AWG
Fine-stranded conductor	0.75 … 25 mm² / 18 … 4 AWG
Fine-stranded conductor; with insulated ferrule	0.75 … 16 mm²
Fine-stranded conductor; with uninsulated ferrule	0.75 … 16 mm²

Connection 2

Connection type	Communication/rate control input
Connection technology	Push-in CAGE CLAMP®
WAGO connector	WAGO 2604 Series
Actuation type	Lever
Strip length	9 … 11 mm / 0.35 … 0.43 inches
Solid conductor	0.2 … 4 mm² / 24 … 12 AWG
Fine-stranded conductor	0.2 … 4 mm² / 24 … 12 AWG
Fine-stranded conductor; with insulated ferrule	0.25 … 2.5 mm²
Fine-stranded conductor; with uninsulated ferrule	0.25 … 2.5 mm²

Physical data

Width	72 mm / 2.835 inches
Height	140 mm / 5.512 inches
Depth	63 mm / 2.48 inches
Note (dimensions)	Height without cover: 92 mm

Mechanical data

Mounting type	DIN-35 rail
Housing design	DIN-rail-mount enclosure

Material data

Housing material	PC 940A
Weight	280 g

Environmental requirements

Ambient temperature (operation)	-40 … +70 °C
Relative humidity	≤ 75 % (for storage ≤ 95 %)

 Continued on next page

Standards and Specifications

Conformity marking	CE
Standards/specifications	EN 50470-1/3
Accounting guideline	MID

Commercial data

PU (SPU)	1 pcs
Packaging type	Box
Country of origin	CN
Customs tariff number	90283019000

Product Classification

UNSPSC	41113630
ETIM 9.0	EC001102
ETIM 10.0	EC001506
ECCN	NO US CLASSIFICATION

Environmental Product Compliance

RoHS Compliance Status	Compliant,No Exemption

Approvals / Certificates

Declarations of conformity and manufacturer's declarations

Approval	Standard	Certificate Name
EU-Declaration of Conformity WAGO GmbH & Co. KG	-	-

Downloads

Environmental Product Compliance

Compliance Search

Environmental Product Compliance 879-3020

Documentation

Manual

Product Manual WAGO Energy Meters (MID)	V 1.8 13.02.2026	pdf 4367.28 KB	

Bid Text

879-3020	xml 6.69 KB	
879-3020	docx 29.22 KB	
ausschreiben.de 879-3020		

Continued on next page

Instruction Leaflet			
Energy consumption meter	V 1.15 16.02.2022	pdf 934.38 KB	

Application Notes

Application Note e!COCKPIT			
e!COCKPIT Application Note WagoAppPower-Measurement	2021-11-08 06.12.2021	pdf 930.71 KB	

CAD/CAE-Data

CAD data
2D/3D Models 879-3020

CAE data
EPLAN Data Portal 879-3020
ZUKEN Portal 879-3020

1 Compatible Products

1.1 Optional Accessories

1.1.1 Communication

1.1.1.1 Communication Module

Item No.: 879-9000
Communication module; Modbus TCP